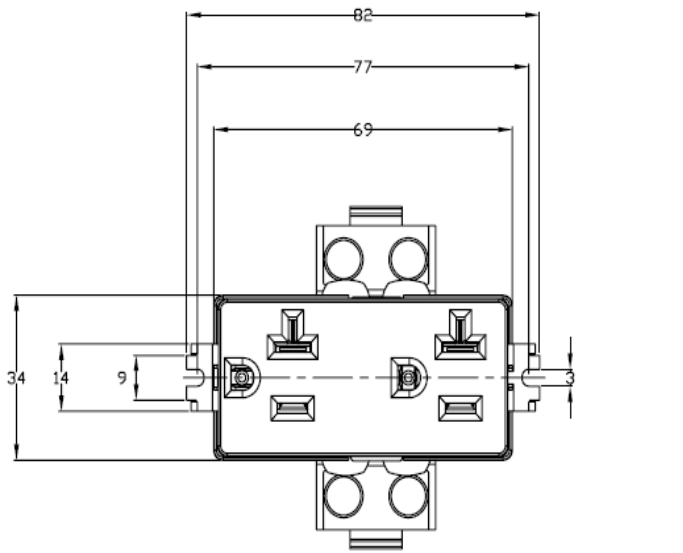

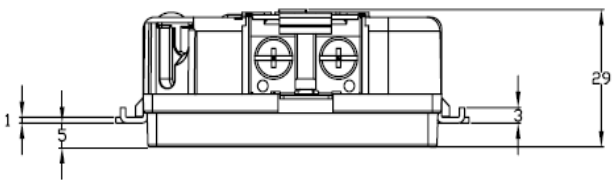

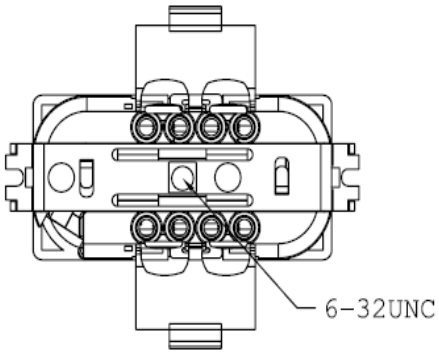

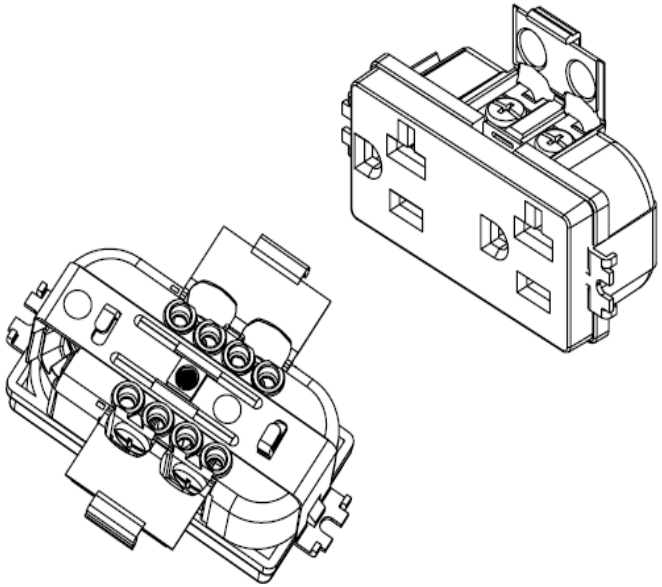

	NAME	DATE	DIMENSION TOLERANCE	MATERIAL	AHOKU	
DRAWN	JIL	2006.06.21	X±0.3 .X±0.1 .XX±0.05 X°±2° .X°±.5°		CA-213G	
CHECKED	BL	2006.06.21				
APP'D	JSL	2006.06.21		SHEET	PART NO:	
SCALE: 1:1		VERSION: *		1 OF 1	DRAW NO:	