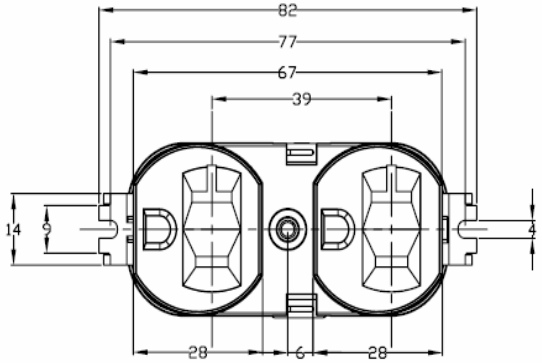

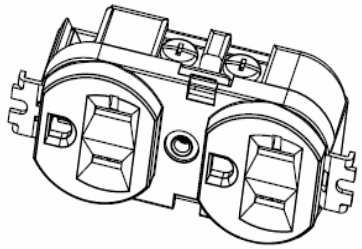

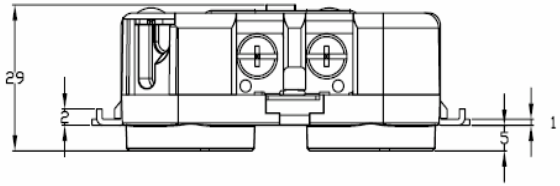

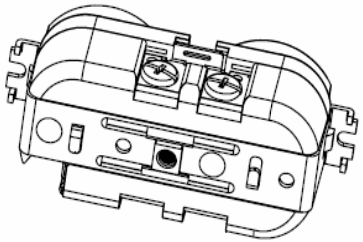

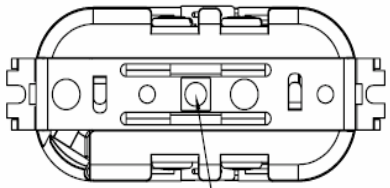

6-32UNC

	NAME	DATE	DIMENSION TOLERANCE	MATERIAL	AOKU	
DRAWN	JIL	2006.06.08	X±0.3 .X±0.1 .XX±0.05 X°±2° .X°±.5°		CA-205G	
CHECKED	BL	2006.06.08				
APP'D	JSL	2006.06.08		SHEET	PART NO:	
SCALE: 1:1	VERSION: *			1 OF 1	DRAW NO:	